Power Tools

Role Play Toys

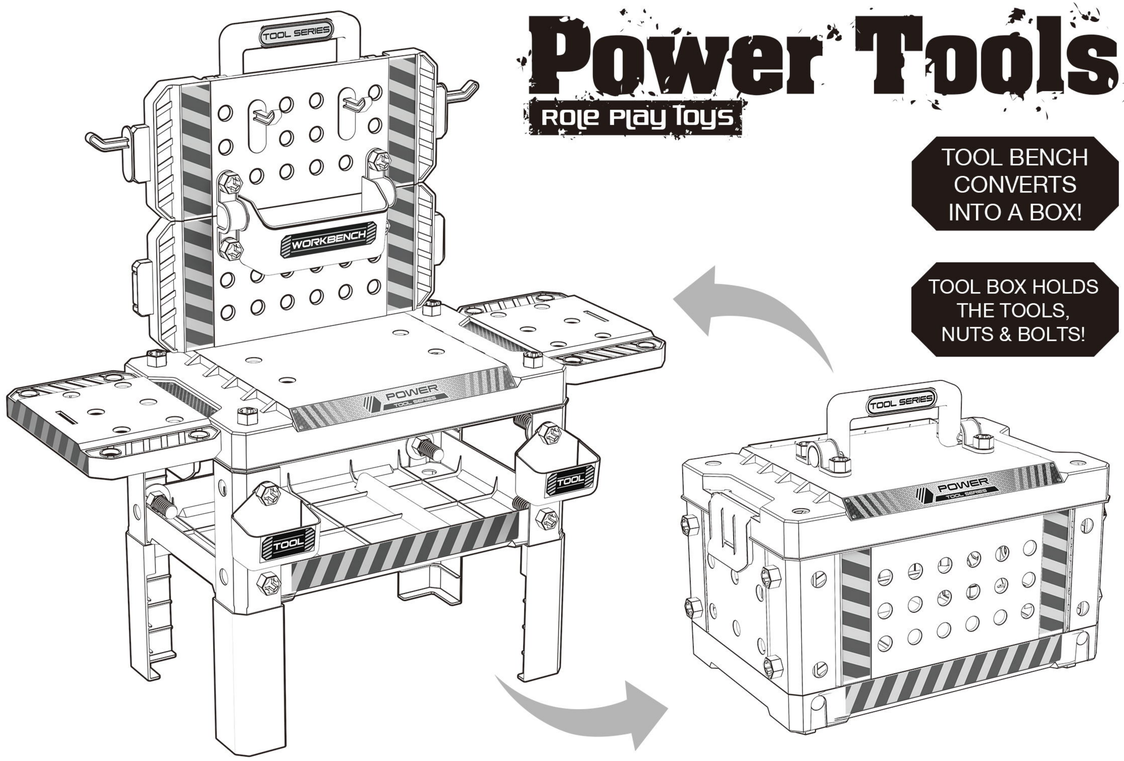

TOOL BENCH CONVERTS INTO A BOX!

TOOL BOX HOLDS THE TOOLS, NUTS & BOLTS!

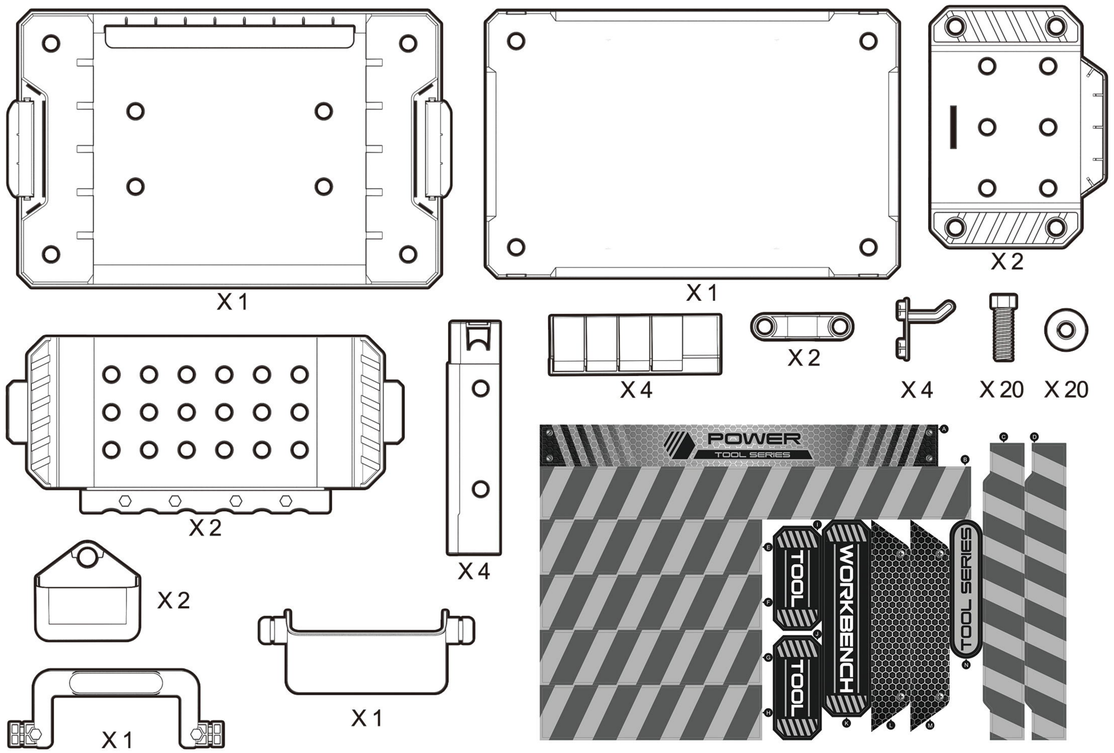

ROLE PLAYING TOYS

INTERESTING EXPERIENCE ×××
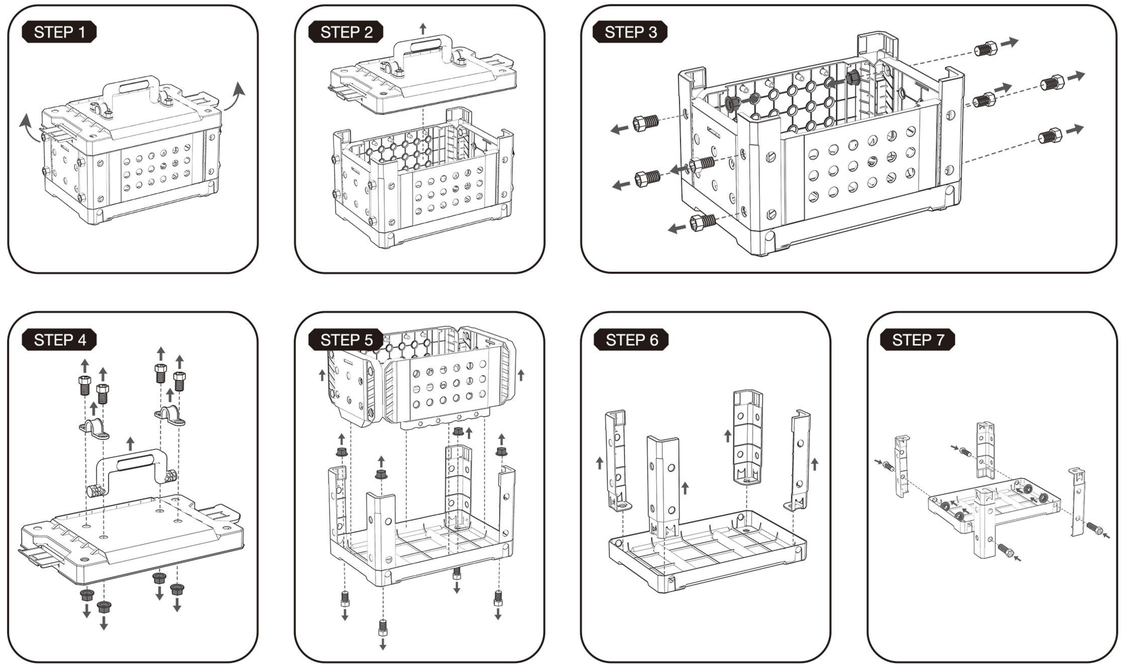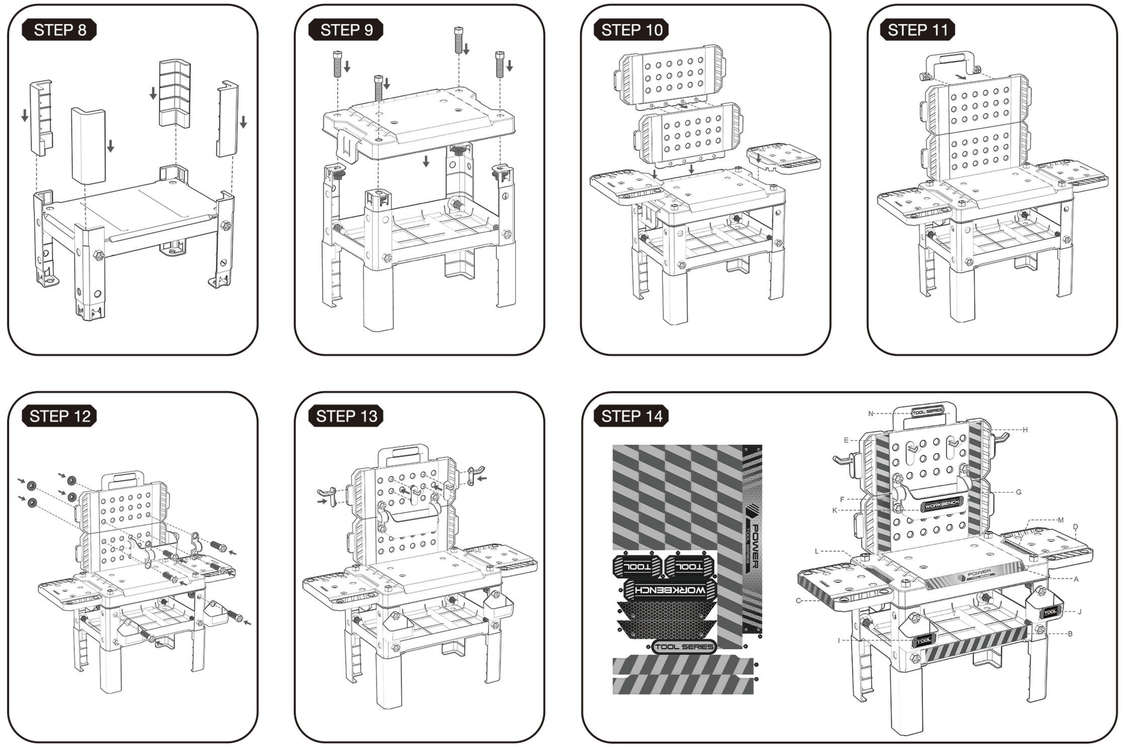
SIMULATION MODELING | REAL EXPERIENCE | COSPLAY | PARENT-CHILD INTERACTION